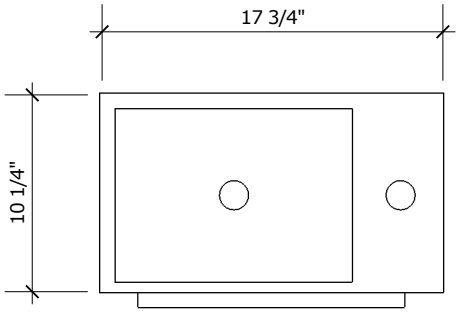

PLAN

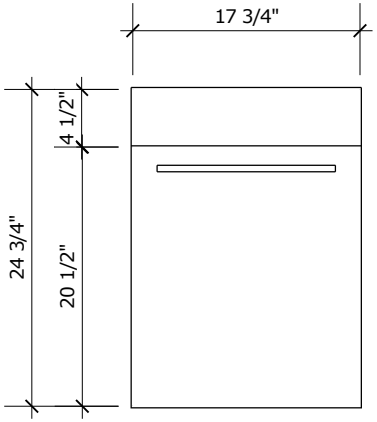

FRONT
ELEVATION

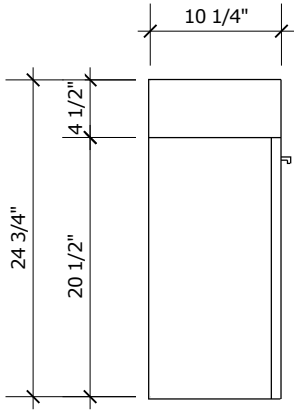

SIDE
ELEVATION

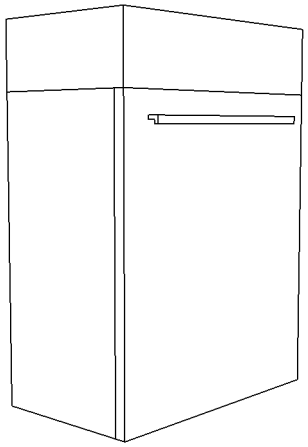

PERSPECTIVE

PROJECT NAME: T460
WORKTOP: POLYMER RESIN
DOOR SHAPE: PLAIN
COLOUR TYPE: HIGH GLOSS WHITE OR LAMINATE

muti KITCHEN & BATH

T460

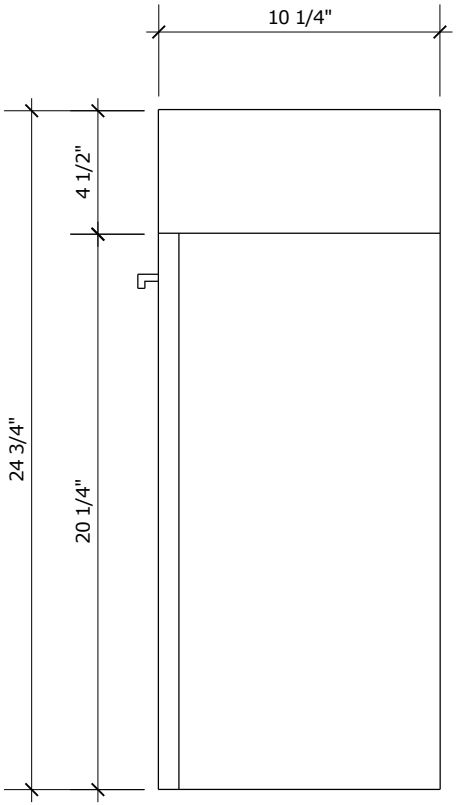

SIDE
ELEVATION

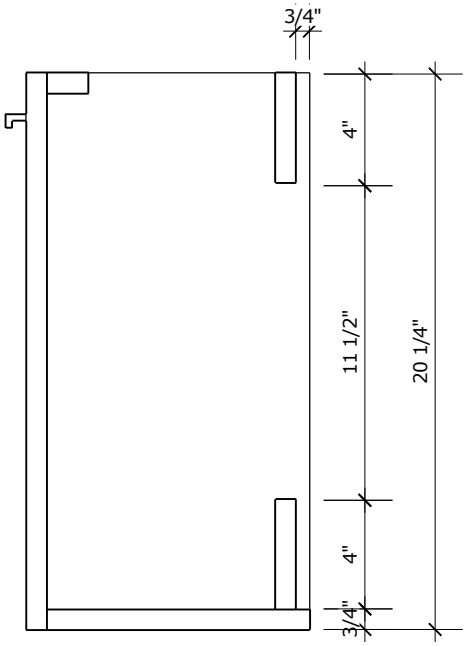

SECTION

PROJECT NAME: T460
WORKTOP: POLYMER RESIN
DOOR SHAPE: PLAIN
COLOUR TYPE: HIGH GLOSS WHITE OR LAMINATE

muti KITCHEN & BATH

T460